Rubber Suspension Element

2

DK-A

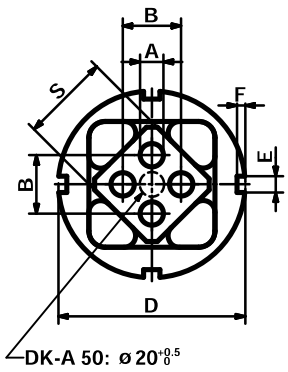

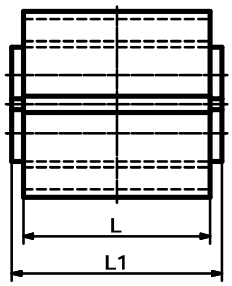

Part no.	Type	øA	B	øD	E	F	□S	L	L1	Weight [kg]
01 071 001	**DK-A 15 × 25**	$5^{+0.5}_{0}$	$10^{\pm 0.2}$	$36^{+0.5}_{-0.1}$	5	2.5	15	25	$30^{0}_{-0.3}$	0.05
01 071 002	**DK-A 15 × 40**	$5^{+0.5}_{0}$	$10^{\pm 0.2}$	$36^{+0.5}_{-0.1}$	5	2.5	15	40	$45^{0}_{-0.3}$	0.08
01 071 003	**DK-A 15 × 60**	$5^{+0.5}_{0}$	$10^{\pm 0.2}$	$36^{+0.5}_{-0.1}$	5	2.5	15	60	$65^{0}_{-0.3}$	0.12
01 071 004	**DK-A 18 × 30**	$6^{+0.5}_{0}$	$12^{\pm 0.3}$	$45^{+0.6}_{-0.1}$	5	2.5	18	30	$35^{0}_{-0.3}$	0.10
01 071 005	**DK-A 18 × 50**	$6^{+0.5}_{0}$	$12^{\pm 0.3}$	$45^{+0.6}_{-0.1}$	5	2.5	18	50	$55^{0}_{-0.3}$	0.16
01 071 006	**DK-A 18 × 80**	$6^{+0.5}_{0}$	$12^{\pm 0.3}$	$45^{+0.6}_{-0.1}$	5	2.5	18	80	$85^{0}_{-0.3}$	0.25
01 071 007	**DK-A 27 × 40**	$8^{+0.5}_{0}$	$20^{\pm 0.4}$	$62^{+0.7}_{-0.1}$	6	3	27	40	$45^{0}_{-0.3}$	0.25
01 071 008	**DK-A 27 × 60**	$8^{+0.5}_{0}$	$20^{\pm 0.4}$	$62^{+0.7}_{-0.1}$	6	3	27	60	$65^{0}_{-0.3}$	0.37
01 071 009	**DK-A 27 × 100**	$8^{+0.5}_{0}$	$20^{\pm 0.4}$	$62^{+0.7}_{-0.1}$	6	3	27	100	$105^{0}_{-0.3}$	0.61
01 071 010	**DK-A 38 × 60**	$10^{+0.5}_{0}$	$25^{\pm 0.4}$	$80^{+0.8}_{-0.1}$	7	3.5	38	60	$70^{0}_{-0.3}$	0.62
01 071 011	**DK-A 38 × 80**	$10^{+0.5}_{0}$	$25^{\pm 0.4}$	$80^{+0.8}_{-0.1}$	7	3.5	38	80	$90^{0}_{-0.3}$	0.82
01 071 012	**DK-A 38 × 120**	$10^{+0.5}_{0}$	$25^{\pm 0.4}$	$80^{+0.8}_{-0.1}$	7	3.5	38	120	$130^{0}_{-0.3}$	1.22
01 071 013	**DK-A 45 × 80**	$12^{+0.5}_{0}$	$35^{\pm 0.5}$	$95^{+1.0}_{-0.1}$	8	4	45	80	$90^{0}_{-0.3}$	1.14
01 071 014	**DK-A 45 × 100**	$12^{+0.5}_{0}$	$35^{\pm 0.5}$	$95^{+1.0}_{-0.1}$	8	4	45	100	$110^{0}_{-0.3}$	1.41
01 071 015	**DK-A 45 × 150**	$12^{+0.5}_{0}$	$35^{\pm 0.5}$	$95^{+1.0}_{-0.1}$	8	4	45	150	$160^{0}_{-0.3}$	2.11
01 071 016	**DK-A 50 × 120**	M12 × 40	$40^{\pm 0.5}$	$108^{+1.2}_{-0.1}$	8	4	50	120	$130^{0}_{-0.3}$	2.26
01 071 017	**DK-A 50 × 200**	M12 × 40	$40^{\pm 0.5}$	$108^{+1.2}_{-0.1}$	8	4	50	200	$210^{0}_{-0.3}$	3.74
01 071 018	**DK-A 50 × 300**	M12 × 40	$40^{\pm 0.5}$	$108^{+1.2}_{-0.1}$	8	4	50	300	$310^{0}_{-0.3}$	5.62

List of torque and loads on page 2.3.
If no other units are specified, the numbers given are in mm.

Rubber Suspension Element

DK-S

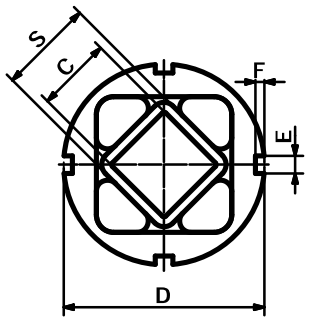

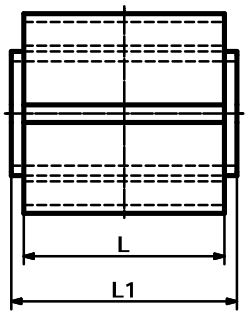

Part no.	Type	□C	øD	E	F	□S	L	L1	Weight [kg]
01 081 001	**DK-S 11 × 20**	$8^{+0.25}_{0}$	$28^{+0.5}_{-0.1}$	4	2.5	11	20	25 ±0.2	0.03
01 081 002	**DK-S 11 × 30**	$8^{+0.25}_{0}$	$28^{+0.5}_{-0.1}$	4	2.5	11	30	35 ±0.2	0.04
01 081 003	**DK-S 11 × 50**	$8^{+0.25}_{0}$	$28^{+0.5}_{-0.1}$	4	2.5	11	50	55 ±0.2	0.07
01 081 004	**DK-S 15 × 25**	$11^{+0.25}_{0}$	$36^{+0.5}_{-0.1}$	5	2.5	15	25	30 ±0.2	0.06
01 081 005	**DK-S 15 × 40**	$11^{+0.25}_{0}$	$36^{+0.5}_{-0.1}$	5	2.5	15	40	45 ±0.2	0.10
01 081 006	**DK-S 15 × 60**	$11^{+0.25}_{0}$	$36^{+0.5}_{-0.1}$	5	2.5	15	60	65 ±0.2	0.14
01 081 007	**DK-S 18 × 30**	$12^{+0.25}_{0}$	$45^{+0.6}_{-0.1}$	5	2.5	18	30	35 ±0.2	0.13
01 081 008	**DK-S 18 × 50**	$12^{+0.25}_{0}$	$45^{+0.6}_{-0.1}$	5	2.5	18	50	55 ±0.2	0.21
01 081 009	**DK-S 18 × 80**	$12^{+0.25}_{0}$	$45^{+0.6}_{-0.1}$	5	2.5	18	80	85 ±0.2	0.32
01 081 010	**DK-S 27 × 40**	$22^{+0.25}_{0}$	$62^{+0.7}_{-0.1}$	6	3	27	40	45 ±0.2	0.27
01 081 011	**DK-S 27 × 60**	$22^{+0.25}_{0}$	$62^{+0.7}_{-0.1}$	6	3	27	60	65 ±0.2	0.40
01 081 012	**DK-S 27 × 100**	$22^{+0.25}_{0}$	$62^{+0.7}_{-0.1}$	6	3	27	100	105 ±0.2	0.66
01 081 013	**DK-S 38 × 60**	$30^{+0.25}_{0}$	$80^{+0.8}_{-0.1}$	7	3.5	38	60	70 ±0.2	0.70
01 081 014	**DK-S 38 × 80**	$30^{+0.25}_{0}$	$80^{+0.8}_{-0.1}$	7	3.5	38	80	90 ±0.2	0.92
01 081 015	**DK-S 38 × 120**	$30^{+0.25}_{0}$	$80^{+0.8}_{-0.1}$	7	3.5	38	120	130 ±0.2	1.36
01 081 016	**DK-S 45 × 80**	$35^{+0.4}_{0}$	$95^{+1.0}_{-0.1}$	8	4	45	80	90 ±0.2	1.30
01 081 017	**DK-S 45 × 100**	$35^{+0.4}_{0}$	$95^{+1.0}_{-0.1}$	8	4	45	100	110 ±0.2	1.65
01 081 018	**DK-S 45 × 150**	$35^{+0.4}_{0}$	$95^{+1.0}_{-0.1}$	8	4	45	150	160 ±0.2	2.38
01 081 019	**DK-S 50 × 120**	$40^{+0.4}_{0}$	$108^{+1.2}_{-0.1}$	8	4	50	120	130 ±0.2	2.50
01 081 020	**DK-S 50 × 200**	$40^{+0.4}_{0}$	$108^{+1.2}_{-0.1}$	8	4	50	200	210 ±0.2	4.14
01 081 021	**DK-S 50 × 300**	$40^{+0.4}_{0}$	$108^{+1.2}_{-0.1}$	8	4	50	300	310 ±0.2	5.59

List of torque and loads on page 2.3.
If no other units are specified, the numbers given are in mm.